LEDWIDE
LEDWIDE LIGHTING CO.,LTD

Tel: 0086 755 29362351 Direct: 0086 0 18680360436
Fax: 86 755 29014058 E-mail: info@ledwide.com
www.ledwide.com
Address:1-2/F, Building A2,Sinopol Ind.Park, First Industrial Zone, BaiHua communities, Guangming New District, Shenzhen, P.R. China Postcode: 518107

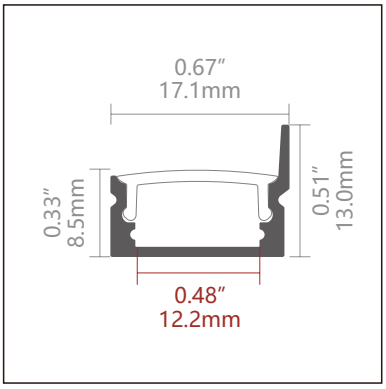

Aluminium LED Profile
LW-AS1-SH

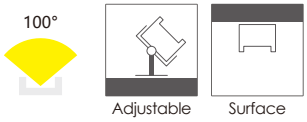

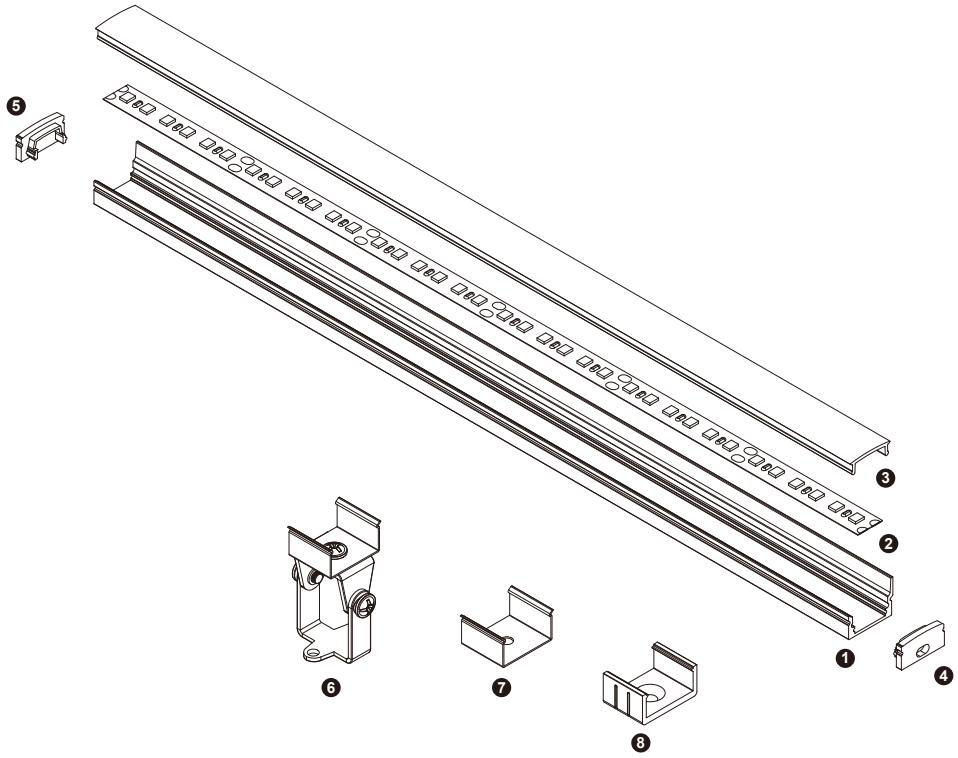

	Name	Code	Material	Color	Other
❶	Aluminum Profile	AS1-SH	Aluminum	Silver / White / Black / RAL color	-
❷	LED strip	-	-	-	MAX. 14.4 W/m
❹	Endcap (with hole)	AS1-Cap-H	Plastic	Grey / White / Black	-
❺	Endcap (without hole)	AS1-Cap	Plastic	Grey / White / Black	-
❻	Adjustable Clip	AS1-Clip-A	Stainless Steel	ecru	-
❼	Metal Clip	AS1-Clip-M	Stainless Steel	ecru	-
❽	Plastic Clip	AS1-Clip-P	Plastic	Clear	-

❸ Optional Diffuser (PMMA)

Color	Light Transmittance	Code
Opal	58%	D001-O
Milky	75%	D001-M
Frost	88%	D001-F
Clear	97%	D001-C
Black	21%	D001-B

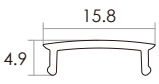

LEDWIDE
LEDWIDE LIGHTING CO.,LTD

Tel: 0086 755 29362351 Direct: 0086 0 18680360436
Fax: 86 755 29014058 E-mail: info@ledwide.com
www.ledwide.com
Address:1-2/F, Building A2,Sinopol Ind.Park, First Industrial Zone, BaiHua communities, Guangming New District, Shenzhen, P.R. China Postcode: 518107

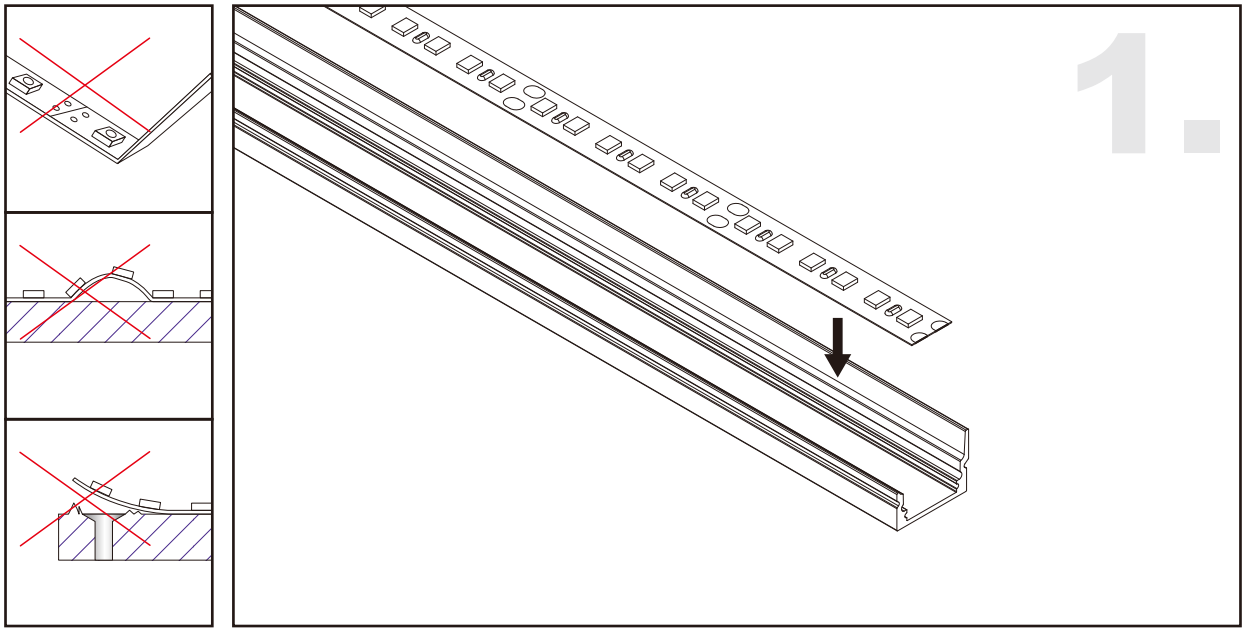

1.

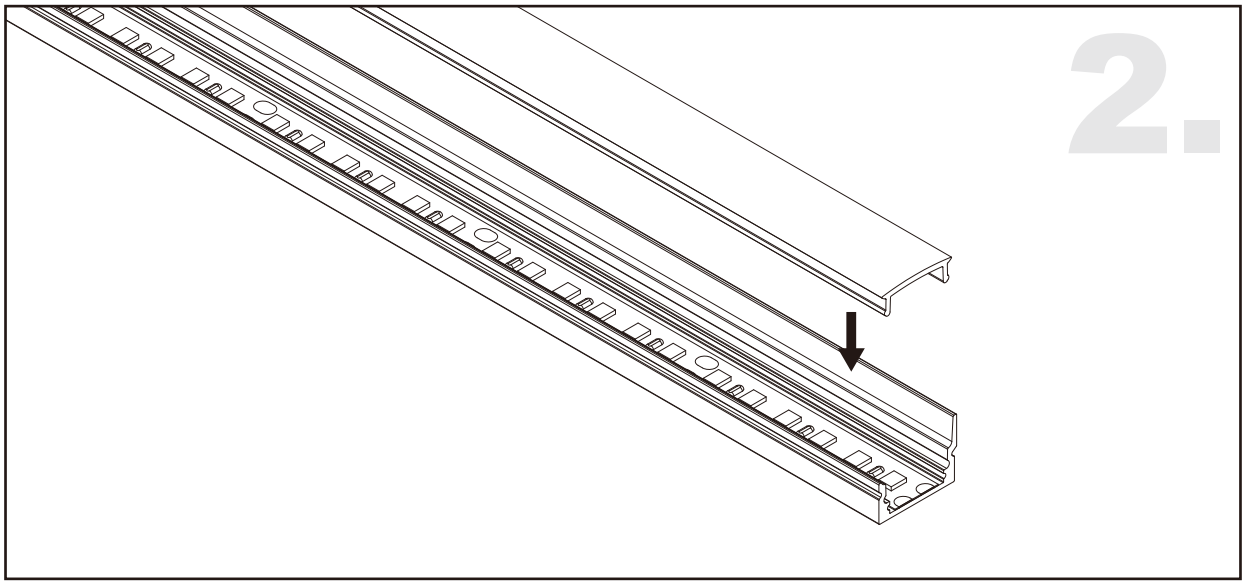

2.

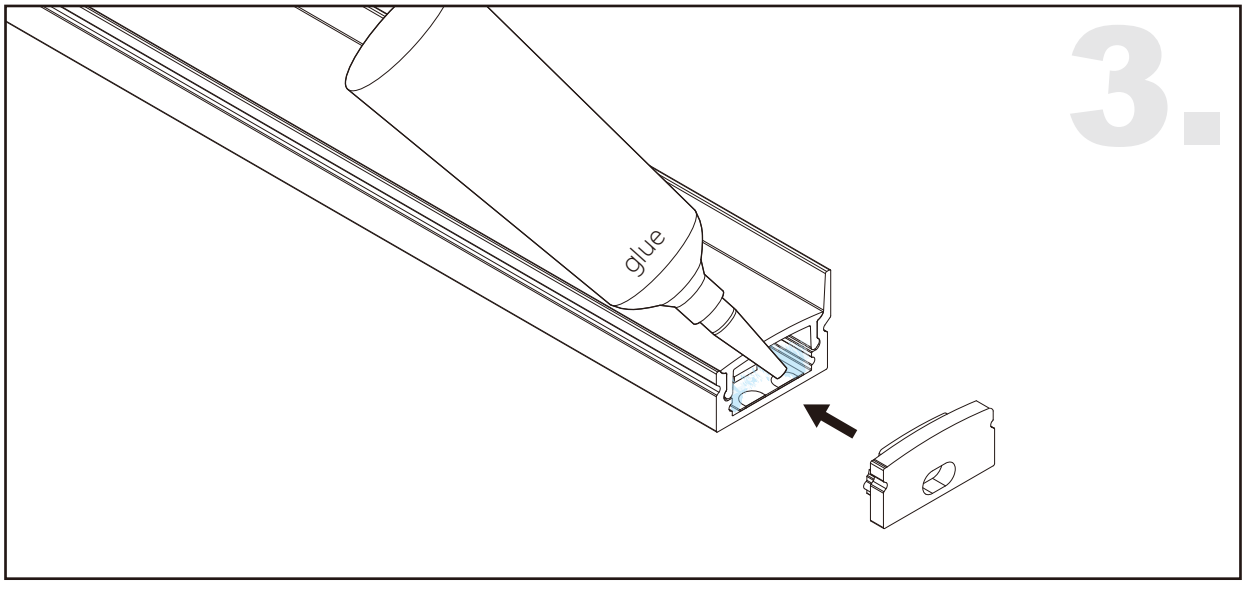

3.

LEDWIDE
LEDWIDE LIGHTING CO.,LTD

Tel: 0086 755 29362351 Direct: 0086 0 18680360436
Fax: 86 755 29014058 E-mail: info@ledwide.com
www.ledwide.com
Address:1-2/F, Building A2,Sinopol Ind.Park, First Industrial Zone, BaiHua communities, Guangming New District, Shenzhen, P.R. China Postcode: 518107

Adjustable Clip Installing Instructions

Adjustable

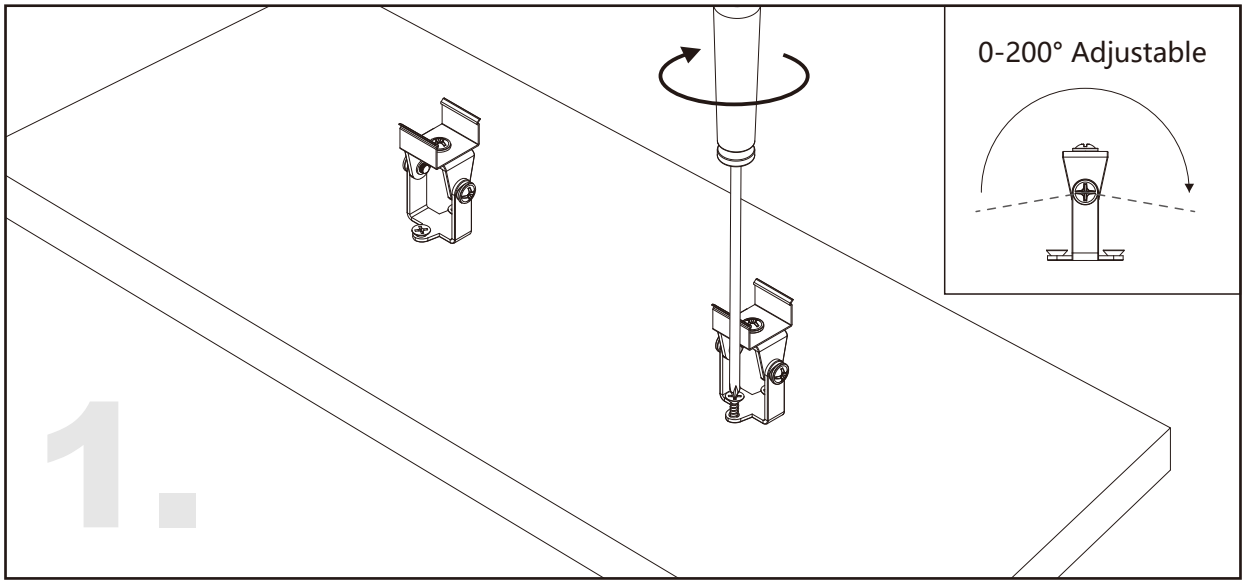

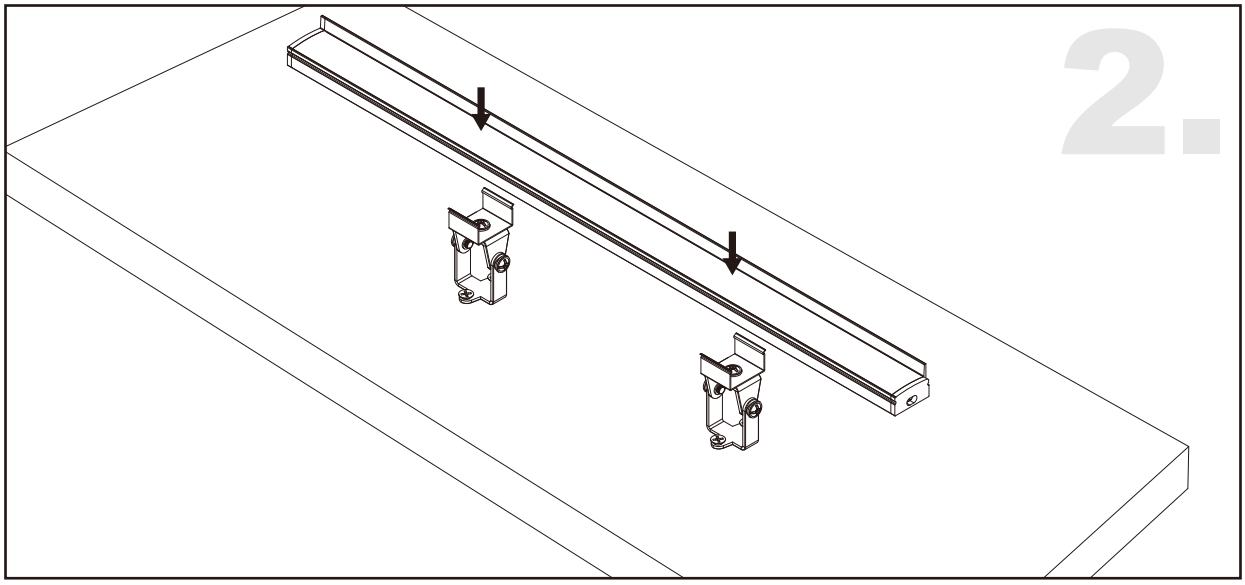

LEDWIDE
LEDWIDE LIGHTING CO.,LTD

Tel: 0086 755 29362351 Direct: 0086 0 18680360436
Fax: 86 755 29014058 E-mail: info@ledwide.com
www.ledwide.com
Address:1-2/F, Building A2,Sinopol Ind.Park, First Industrial Zone, BaiHua communities, Guangming New District, Shenzhen, P.R. China Postcode: 518107



Metal Clip / Plastic Clip Installing Instructions

Surface

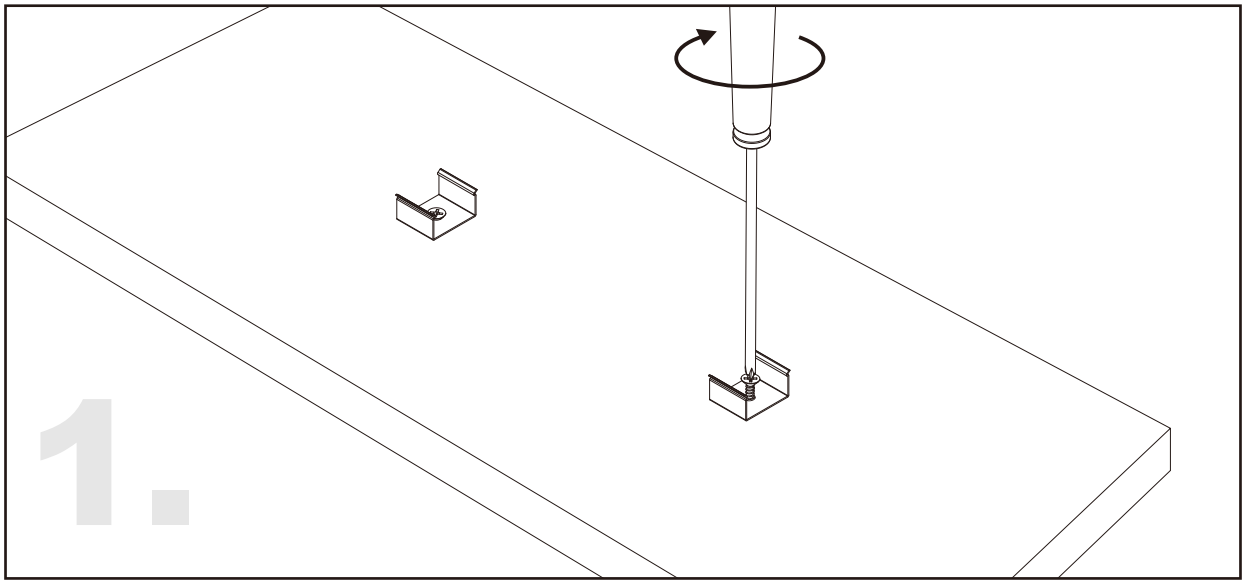

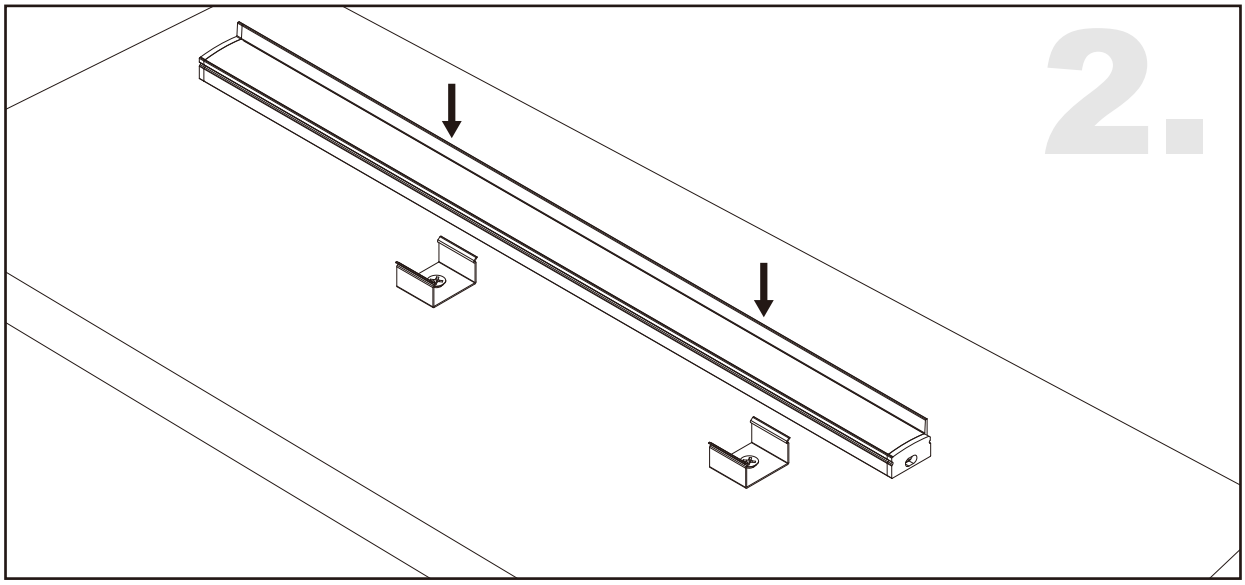

LEDWIDE
LEDWIDE LIGHTING CO.,LTD

Tel: 0086 755 29362351 Direct: 0086 0 18680360436
Fax: 86 755 29014058 E-mail: info@ledwide.com
www.ledwide.com
Address:1-2/F, Building A2,Sinopol Ind.Park, First Industrial Zone, BaiHua communities, Guangming New District, Shenzhen, P.R. China Postcode: 518107

Direct Screwing Installing Instructions

Surface

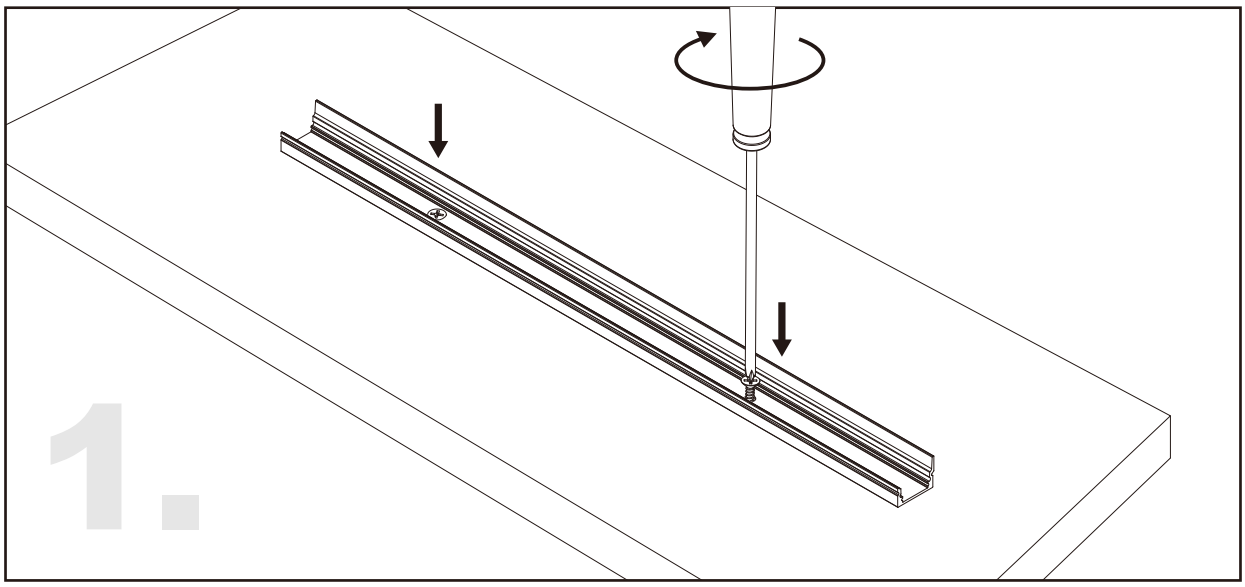

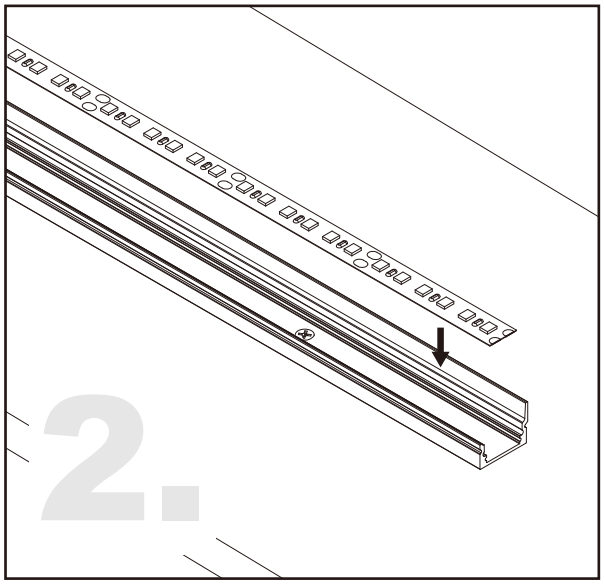

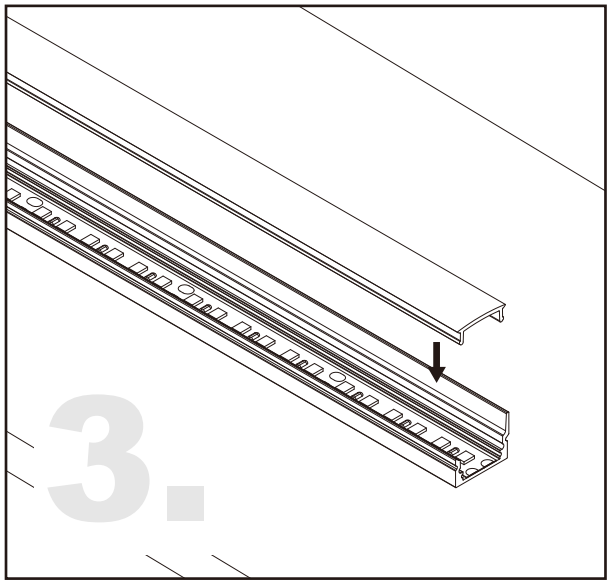

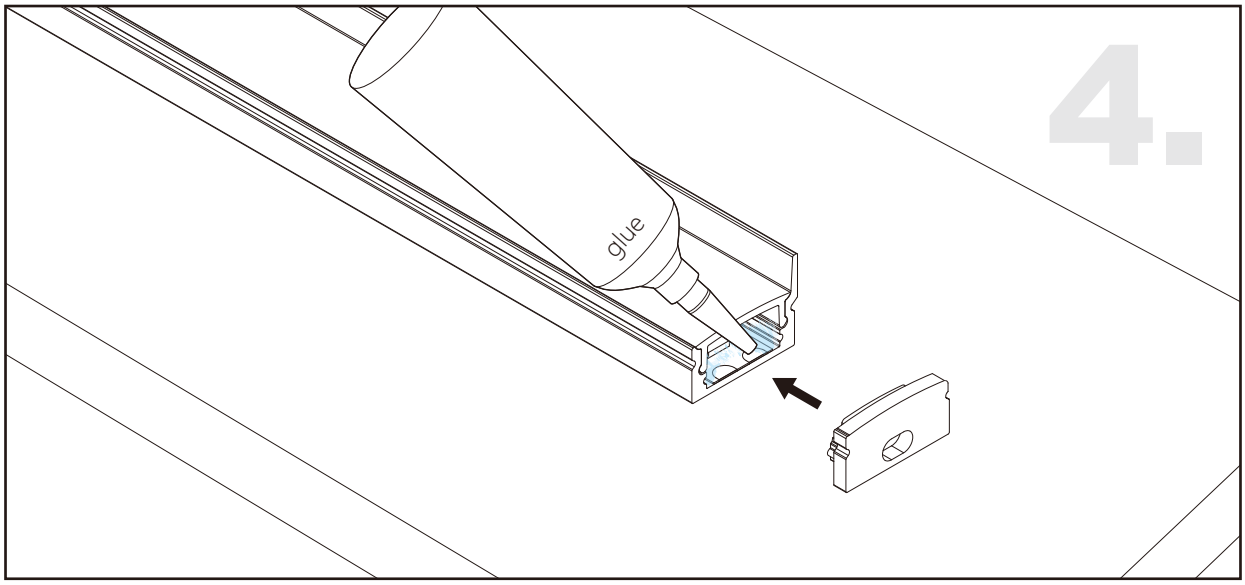

LEDWIDE
LEDWIDE LIGHTING CO.,LTD
Tel: 0086 755 29362351 Direct: 0086 0 18680360436
Fax: 86 755 29014058 E-mail: info@ledwide.com
www.ledwide.com
Address:1-2/F, Building A2,Sinopol Ind.Park, First Industrial Zone, BaiHua communities, Guangming New District, Shenzhen, P.R. China Postcode: 518107

